Western Electric

304B Vacuum Tube

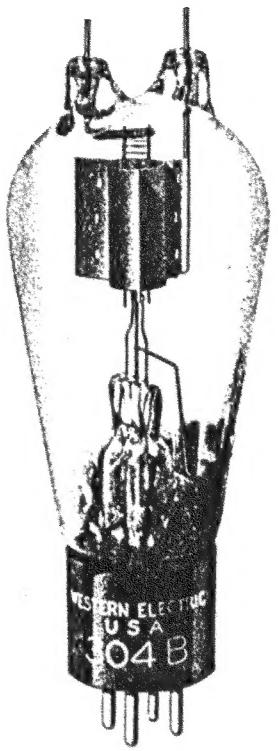

Classification—Filamentary air-cooled triode

Class B and C applications for approximately 60 watts peak output. It is designed for ultra high frequencies, and to be interchangeable with the 304A.

Dimensions—Dimensions and outline diagrams are shown in Figures 1 and 2. The overall dimensions are:

Maximum overall length	6 7/8"
Maximum diameter	2 7/16"

Mounting—Medium four-pin thrust type base for use in a Western Electric 143B or similar socket for vertical mounting only. Filament terminals only connected in the base. Grid and plate terminals at top of bulb must have large cooling lugs if operated above 30 megacycles. A typical cooling lug is shown in Figure 3.

Filament—Thoriated tungsten.

Filament voltage	7.5 volts, a.c. or d.c.
Nominal filament current	3.25 amperes
Average thermionic emission	1.0 ampere

Copyright 1936 Western Electric Company, Incorporated

Characteristics—Performance data given below are based upon a typical set of conditions. Variations can be expected with different circuits and tubes.

Figures 4 and 5 give the static characteristics of a typical tube plotted against grid and plate voltages.

Average Characteristics at maximum direct plate voltage and dissipation ($E_b = 1250$ volts, $I_b = 40$ milliamperes).

Amplification factor	11
Grid to plate transconductance	2000 micromhos
Plate resistance	5500 ohms

Average Direct Interelectrode Capacitances

Plate to grid	2.5 $\mu\mu$f
Plate to filament	0.7 $\mu\mu$f
Grid to filament	2.0 $\mu\mu$f

Operation

Maximum Ratings

Max. direct plate voltage	1250 volts
Max. direct plate current	100 milliamperes
Max. plate dissipation	50 watts
Max. r–f grid current	6 amperes
Max. direct grid current	25 milliamperes
Max. frequency for above ratings	100 megacycles
Max. plate voltage for upper frequency limit of 300 Mc	750 volts
Max. plate voltage for frequencies between 100 and 300 Mc in proportion	

Class B Audio Amplifier or Modulator for Balanced 2 Tube Circuit

Direct plate voltage	1250	1000	750 volts
Grid bias	−110	−85	−55 volts
Direct plate current per tube,			
No drive	20	20	20 milliamperes
Maximum drive	100	100	100 milliamperes
Load resistance per tube	3500	2500	1750 ohms
Load resistance plate to plate	14000	10000	7000 ohms
Power output depends on distortion requirements			
Approximate Maximum Output (per pair of tubes)	140	110	85 watts
Recommended power for driving stage	10	10	10 watts

Class B Radio-Frequency Amplifier

Direct plate voltage	1250	1000 volts
Grid bias	−110	−85 volts
Direct plate current for carrier conditions	60	60 milliamperes
Approximate carrier watts for use with 100% modulation	25	20 watts

Class C Radio-Frequency Oscillator or Power Amplifier—Unmodulated

Direct plate voltage	1250	1000 volts
Direct plate current	100	100 milliamperes
Grid bias	−180 to −225	−135 to −180 volts
Nominal power output	85	65 watts

Class C Radio-Frequency Oscillator or Amplifier—Plate Modulated

Direct plate voltage	1000 max.	750 volts
Grid bias	−180	−135 volts
Direct plate current	100	100 milliamperes
Max. direct grid current	25	25 milliamperes
Nominal carrier power output for use with 100% modulation	65	50 watts

Ultra High Frequency Operation

For frequencies above 100 megacycles, the maximum plate voltage must be reduced as follows:

Frequency	100	150	200	250	300 megacycles
Plate voltage:					
Class B Amplifier	1250	1125	1000	875	750 volts
Class C Oscillator or Amplifier—Unmodulated	1250	1125	1000	875	750 volts
Class C Oscillator or Amplifier—Plate Modulated	1000	900	800	700	600 volts

Nominal power obtainable in a load for Class C Unmodulated Operation is approximately as follows:

Frequency	100	200	300 megacycles
Plate voltage	1250	1000	750 volts
Power output	60	35	13 watts
Efficiency	48	35	17 per cent

Limit of oscillation, approximately 400 megacycles.

Operating Precautions

Mechanical—Figs. 1 and 2 show the overall dimensions and basing arrangement for the tube.

The tubes should not be subjected to mechanical shock or excessive vibration. Mechanical vibration may cause breakage of the thoriated tungsten filaments.

A free circulation of air must be provided to insure adequate cooling of the glass during operation.

Care must be taken in connecting to the grid and plate terminals, as these terminals are not provided with caps because of high frequency considerations. Connections to these terminals must be sufficiently flexible to eliminate any strain on the glass. Also, the leads must not be made to support other apparatus such as coils or condensers. For frequencies below 30 megacycles, ordinary Fahnstock clips make satisfactory connectors. For frequencies higher than 30 megacycles, because of the high radio-frequency charging currents to the interelectrode capacitances, it is necessary that the connectors assist in cooling the lead-in wires. A connector such as shown in Fig. 3 is recom-

mended, but its weight should not rest against the glass bead. Circuit connections must be flexible and yet of low inductance and resistance to high frequency currents. Copper ribbon about 34 B. & S. gauge and 3/8" to 1/2" wide should be satisfactory. Soldering to the tube terminals is not recommended as the seals may be cracked doing so. Also this type of connection is unsatisfactory because of the high operating temperature of the leads.

Electrical—Overload protection should always be provided for the plate circuit. A suitable fuse or circuit breaker should remove the plate voltage if the plate current exceeds 150 milliamperes per tube. Although the tube is sufficiently rugged to withstand momentary overloads, a prolonged overload caused by inefficient adjustment of the circuit, may damage the tube. When adjusting a new circuit, reduced plate voltage or a series resistance of 1000 to 5000 ohms in the plate circuit should be used until it is operating properly.

The filament should always be operated at the rated voltage, measured at the tube terminals. A 5% decrease in filament voltage reduces the thermionic emission approximately 25%. Either direct or alternating current may be used for heating the filament. If direct current is used, the plate and grid circuit returns should be connected to the negative filament terminal. If alternating current is used, the circuit returns should be connected to the center tap of the filament heating transformer winding or to the center tap of a resistor placed between the filament terminals. A resistance of 20 to 30 ohms of three watt rating is suitable.

In cases where severe and prolonged overload has temporarily impaired the electronic emission of the filament, the activity may be restored by operating the filament, with the plate and grid voltages off, 30% above normal voltage for 10 minutes followed by a longer period at normal voltage.

Audio Amplifier or Modulator

Class B—Grid bias practically at cut-off and grid driving voltage higher than the bias.

In a Class B audio-frequency power amplifier or modulator two 304B tubes may be used in a balanced circuit, a driving stage capable of about 10 watts output is required, and an input transformer with good regulation must be used so that the grid current drawn during positive grid swings does not produce appreciable distortion. The output transformer must transform the load impedance to the proper value for the tubes used. The power output obtainable will be determined by the quality of the transformer used and the amount of distortion which can be tolerated. The grid bias must be held constant and therefore cannot be obtained by grid leak or series resistor methods. A battery or other source having good regulation is necessary.

The power required of a modulator for complete modulation of a Class C amplifier is one-half the direct power input to the plates of the Class C amplifier.

Radio-Frequency Oscillator or Power Amplifier

Class B—Radio-Frequency Amplifier

The Class B radio-frequency amplifier is used to amplify a modulated radio-frequency carrier wave without appreciable distortion. It operates similarly to the Class B audio amplifier except that a single tube may be used, the tuned output circuit serving to preserve the wave shape. The push-pull circuit, however, eliminates the even order harmonics and thus increases the efficiency slightly.

Class C—Radio Frequency Oscillator or Power Amplifier—Grid Bias Below Cut-Off

Unmodulated

This type of operation is suitable for telegraphy, or the production of a continuous flow of radio-frequency power for purposes other than communication.

Plate Modulated

This type of operation is for use when the modulating voltage is superimposed on the plate supply voltage and to obtain good quality the output power should vary as the square of the plate voltage. For complete or 100% modulation, the plate voltage varies from zero to twice the applied direct value during a cycle of the audio frequency. With no modulation applied, the plate voltage is, of course, the direct value and the carrier power output is one-fourth of the peak power output under 100% modulation. In this case, since the plate voltage varies with modulation, the direct value must be rated lower than for other types of operation.

Ultra High Frequency Operation

The 304B tube is particularly suited for use in the frequency range from 30 to 300 megacycles. When used in this frequency range, cooling lugs must be used on the grid and plate leads as previously mentioned.

The tube may be used at full rating up to 100 megacycles. For higher frequencies, dielectric losses, and lead-in heating due to charging currents are greatly increased and therefore the plate voltage must be reduced as indicated in the table. Large cooling lugs 1¼" square are required when the tube is operated above 100 megacycles. In the large cooling lug the mounting hole shall be located along the center line and the length of the set screw should be increased accordingly. The plate dissipation should not be allowed to exceed 50 watts.

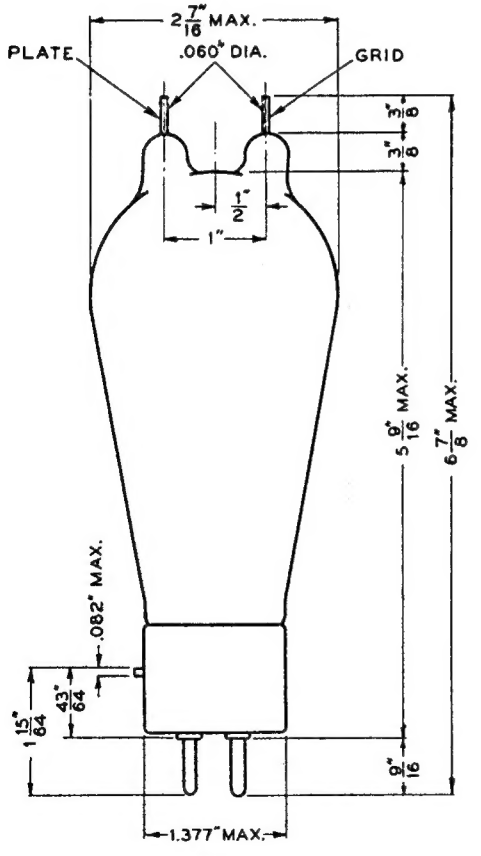

FIG. 1

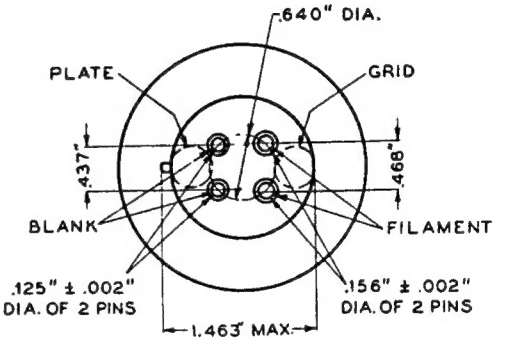

FIG. 2

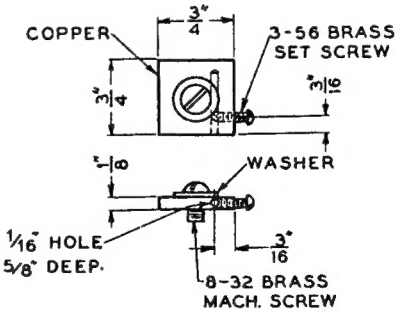

FIG. 3

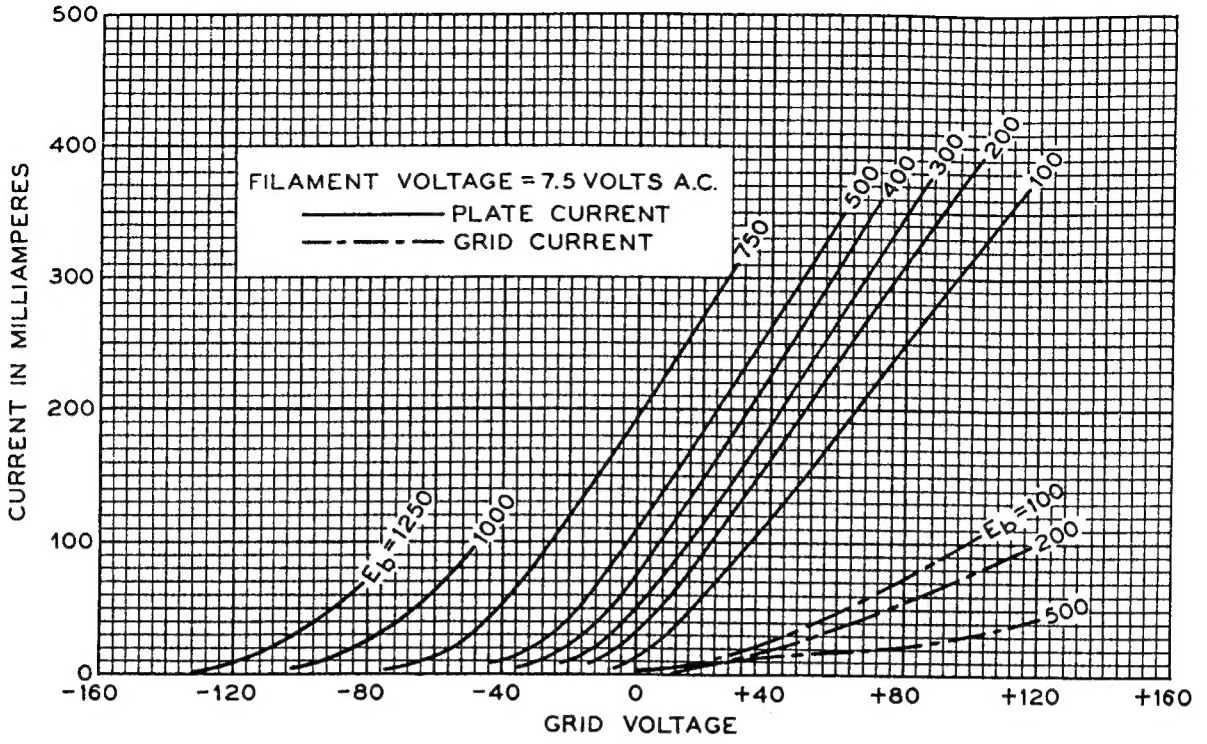

FIG. 4

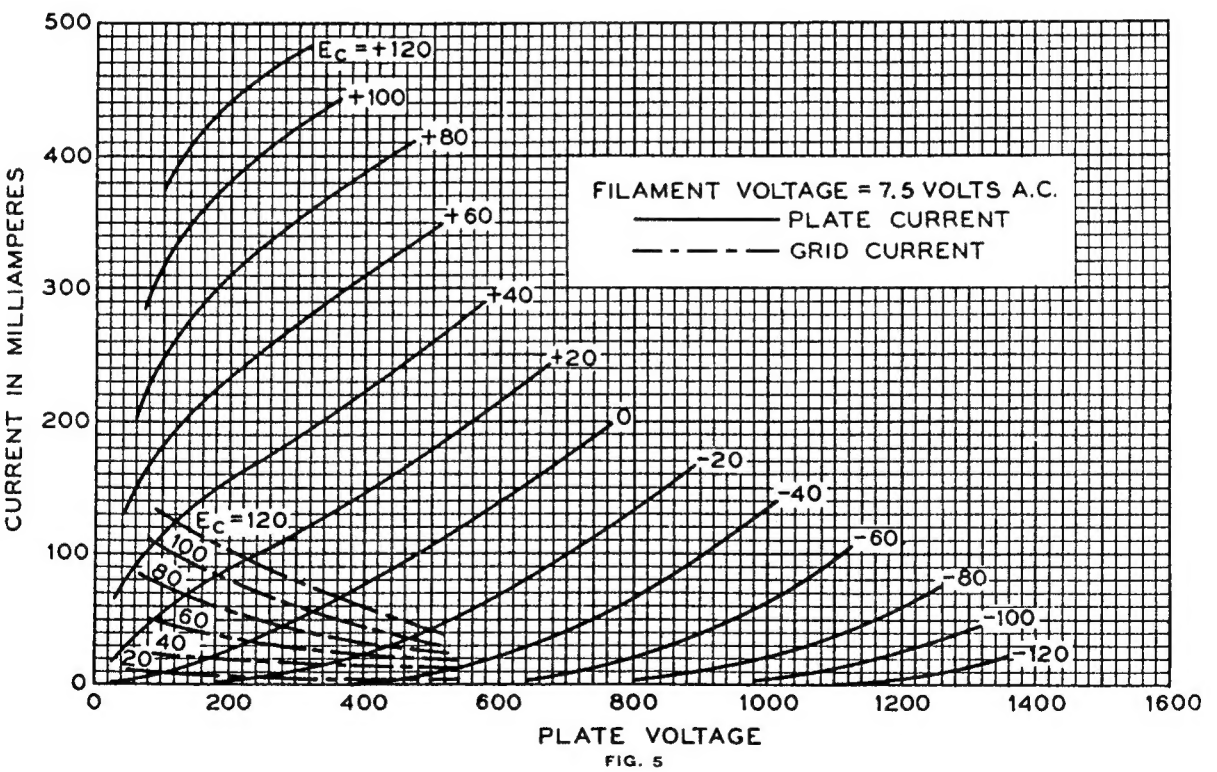

FIG. 5

1-D-36-53C
PRINTED IN U.S.A.

A development of Bell Telephone Laboratories, Incorporated, the research laboratories of the American Telephone and Telegraph Company, and the Western Electric Company

V. T. DATA SHEET 304B
ISSUE 1